ROXEL

Instruction manual

RDR-10



DAB +, FM radio with Rechargeable battery and BT

Product Specification：

- The unit is with both DAB/DAB+ and FM receiver.
- Headphone jack.
- With wireless Bluetooth 5.3 technology, it can easily connect with Bluetooth devices such as iPhone, iPad, smart phone, and enjoy high-quality music at any time.
- Using high-end DAB chip to receive more and more sensitive digital signals.
- DAB program picture display.
- 2.4-inch LCD display, 320x240 pixels, highlighting clearer text and picture display effect.
- Screen saver and screen brightness adjustment.
- Multiple time display effect and time setting selection.
- Dual alarm setting function.
- Nine countries Language choice.
- High sensitivity FM and DAB radio.
- Built in 1200mAh polymer rechargeable battery.
- Fashionable and portable, suitable for home, office, outdoor travel, sports, leisure, entertainment, learning, etc.

Packing list:

DAB receiver: 1pcs
USB - C cable: 1pcs
User manual: 1pcs

FRONT & SIDE PANEL

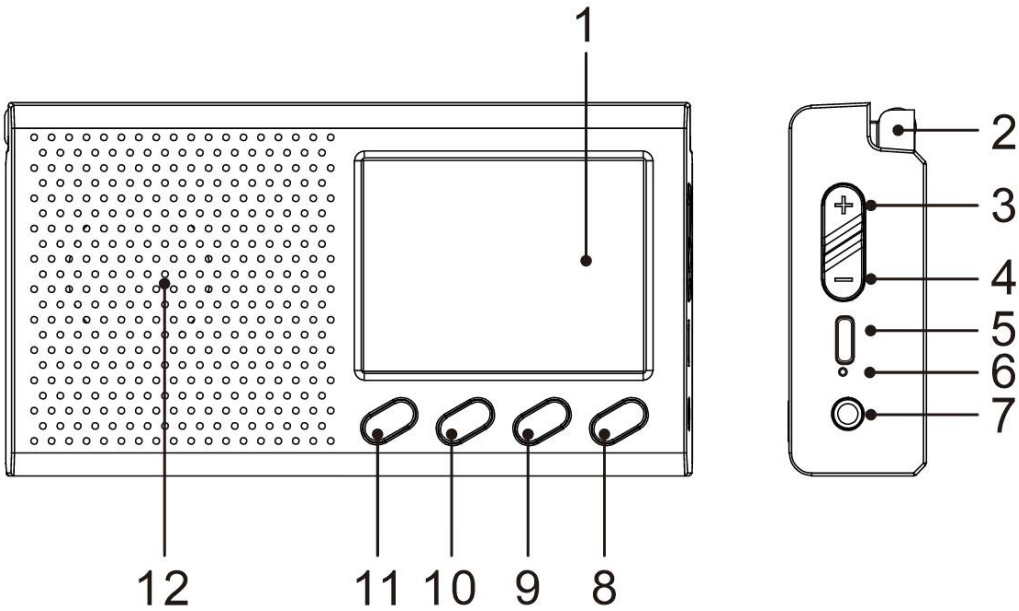

1. **DISPLAY**
   Display the operation status and information.
2. **ANTENNA**
3. **+ :** Press to view the program information, press and hold this button to volume up.
4. **- :** Press to enter setup menu, press and hold this button to volume down.

5. **USB-C CHARGING SOCKET**
6. **CHARGING INDICATOR LIGHT**
   Turns red during charging, and turns green when fully charged.
7. **HEADPHONE JACK**
   Connect to an external headphone.
   Headphone connection (3.5mm).
8. **⏻/MODE/STANDBY**
   Press and hold this button turn on the unit.
   Short press to mode (DAB+/FM/Bluetooth) selection interface.
   Press and hold it to standby (Press this button again will be wake up the unit once the unit enter into standby function)
   Press and hold it again to turn off the unit.
9. **V:**
   DAB +: After scanning all the available DAB stations, press to display and navigate the station list.
   FM: Press to fine tune to the lower frequency in FM mode.
   Press and hold to search the previous lower frequency station.
10. **OK:** Enter
11. **^:**
    DAB +: After scanning all the available DAB

stations, press to display and navigate the station list.
FM: Press to fine tune to the higher frequency in FM mode.
Press and hold to search the next higher frequency station.

12. **SPEAKER**

BASIC OPERATION

Press and hold the ⏻ button to turn on the unit. To turn off, press and hold the ⏻STANDBY button twice.

DAB +/FM/Bluetooth
When the unit is turned on, press the ⏻button to toggle between DAB +, FM, and Bluetooth mode.

Volume Control
Press and hold the “+/-” button.

Adjusting the Antenna
The telescopic antenna at the rear panel of the unit should be fully extended to ensure a good DAB +/FM reception. Alter the antenna position for the best reception.

DAB+ OPERATION

The first time the DAB + mode is selected, it will automatically scan for available DAB + stations. The display will show the scanning progress. Wait until the scanning has finished.

Full Scan

Press and hold the "OK" button to start auto-scanning the available stations.

Manual Scan

1. Press the **"-"** button to access the menu control.
2. Press the **"V"** button repeatedly until the "Manual Tune" is selected and then press the **"OK"** button.
3. Press the **"^/v"** button repeatedly to select the desired channel (5A - 13F).
4. Press the **"OK"** button to confirm.
5. To quit the menu control, press the **"-"** button repeatedly.

Tuning

After scanning all the available DAB stations, press the **"^/v"** button to display and navigate the station list. Then press the **"OK"** button to tune to the station within a few seconds.

Storing DAB + Presets

You can save up to 20 DAB + stations.

1. Press the **"^/v"** button to select the station you wish to store.
2. To save it to the preset channel, press the

“-” button, then press the **“^/v”** button repeatedly to select “Preset Store”, press **“OK”** to confirm.
3. Press the **“^/v”** button repeatedly to select the desired preset channel to save.
4. Press the **“OK”** button to save.

Recall Stored DAB + Presets

1. To recall the preset channel, press the “-” button.
2. Press the **“^/v”** button repeatedly to select “Preset Recall”, then press the **“^/v”** button repeatedly to select the desired preset channel to recall.
3. Press the **“OK”** button to recall.

Note:
The telescopic antenna at the rear panel of the unit should be fully extended to ensure a good reception. Alter the antenna position for the best reception.

DAB + MENU OPERATIONS

Press the **“-”** button to access the menu control. Then press the **“^/v”** button repeatedly for different options as described below.

Prune Invalid

This function removes inactive stations.

1. Press the **“-”** button to access the menu control.
2. Press the **“^/v”** button repeatedly until the

“Prune Invalid” is selected and then press the **“OK”** button.

3. Press the **“v”** button to select **“Yes”**.
4. Press the **“OK”** button to confirm.
5. To quit the menu control, press the **“-”** button repeatedly.

FM RADIO OPERATION

Auto Scan

1. Turn on the unit in FM mode.
2. Press and hold the **“^/v”** button to semi-automatic search stations (max. 20 storage).

Storing FM Presets

You can save up to 20 FM presets.

1. Tune to the station you wish to store.
2. To save it to the preset channel, press the **“-”** button to enter menu, then press the “^/v” button to select “Preset Store”. Press **“OK”** button to confirm.
3. Press **“^/v”** button to select the desired preset channel to save.
4. Press **“OK”** button to save.

Recall Stored FM Presets

1. To recall the preset channel, press the **“-”** button. Press the **“^/v”** button to select “Preset Recall”, then press “OK” button to confirm.
2. Press the **“^/v”** button to select the

desired preset channel to recall.

3. Press the **“OK”** button to recall.

Note:

The telescopic antenna at the rear panel of the unit should be fully extended to ensure a good reception. Alter the antenna position for the best reception.

OTHER FM MENU OPERATIONS

Press the “-” button to access the menu control. Then press the **“^/v”** button for different options as described below.

Scan Setting

1. Press the **“-”** button to access the menu control.
2. Press the **“^/v”** button until the **“Scan Setting”** is selected and then press the **“OK”** button.
3. Press the **“^/v”** button to select **“Strong Stations”** or “All Stations” and then press the “OK” button to confirm. When the **“Strong Stations”** is selected, only the strong stations are detected, scanning will ignore the noisy stations. When “All Stations” is selected, all stations will be detected during FM scanning even if the radio station is noisy.
4. The next time doing the FM scan, the unit will search for the stations based on this confirmed setting.

5. To quit the menu control, press the “-” button repeatedly.

BLUETOOTH AUDIO

Please follow the pairing instructions below to link the unit to your Bluetooth device.

1. Press the ⏻ button to enter the main interface. Press the **“^/v”** button to select Bluetooth mode, and then press the “OK” button to confirm. The display will show **“Pairing”**. It will start searching.
2. Turn on the Bluetooth function of your device and enable the search until “**Roxel RDR-10**” is found. Select it on the Bluetooth device to make connection.
3. Enter the pass code “0000” if required.
4. After successfully paired, the display will show “Connected”.
5. You can now start playing music from your smartphone wirelessly to the speaker.
6. You can press the **“OK”** button to pause or resume the playback.
7. You can press the **“^/v”** button to skip to the previous or next song.

Note:

- **Press and hold the “OK” button will disconnect the connection and start to search another new Bluetooth device.**
- **The unit will turn to standby mode automatically once no music has been playing for around 15 minutes in Bluetooth mode. When the unit is turn**

to standby, press the ⏻ button to turn on the unit again.

HEADPHONE mode/LINE-OUT mode

When the unit is playing music, insert a 3.5mm jack headphone to the headphone socket, you will hear the sound from the connected headphone.

You can also connect the unit with an external active speaker or Hi-fi system with Line in function. Then you can hear the sound of the unit on the external speaker or Hi-fi system.

Noted: The 3.5mm aux cable is not included.

SYSTEM SETTINGS

There are several system settings available for user to select their preference. Press the "-" button in any mode to access the menu control. Press the "^/v" button for different selections as shown below. Then press the "OK" button to setup. To quit the menu control, press the "-" button repeatedly.

- Backlight
- Time/Date
- Alarms
- Sleep
- EQ
- Language
- Factory Reset
- Software Version

Backlight

If there is no user operation on the unit for a period of time (timeout), the unit's display backlight level could automatically be lowered to save power. The timeout can be set to 10sec, 20sec, …, up to 180sec. If the timeout is set to "Always On", it means the display is always on without any auto-dim function. In addition, you can set the display backlight level and dim level respectively.

Time/Date

Under the Time/Date selection, there are several setups as described below.

Set Time/Date

You can manually set the time and the date under this menu.

Set Hour System

You can set the time display format as 12 or 24 Hour display.

Set Date Format

You can set the date display format as dd-mm-yyyy, mm-dd-yyyy or yyyy-mm-dd.

Clock Style

You can set the clock style display in Standby mode. They are Analog or Digital.

Auto Update

You can set the Time/Date update condition as listed below.

"Update from Radio":

Time/Date will be updated by DAB

broadcast/FM automatically.
“No Update”:
Time/Date will never be updated.

Alarm Setup
There are 2 alarms that can be set independently. Each alarm can be set as Once, Daily, Weekends and Workday. Alarm source can be FM, DAB, or Buzzer. Finally alarm volume can be set.
To enable the alarm, set the alarm to be “On”.
To disable the alarm, set it to “Off”.
When the alarm starts, press the ⏻ button to stop the alarm.

Sleep Function
You can set the sleep timer function among off, 15, 30, 45, 60,75,90,105,120 minutes.
1. During the sleep timer count down, there is a moon icon shown on the display bottom area.
2. When the sleep timer is zero, the unit will be turned to STANDBY automatically.

Equalizer Operation
You can also enjoy different EQ sound presets. These EQ presets are Normal, Classic, Pop, Jazz, Rock, Flat, Movie and News.

Language
You can set the unit in different operation

languages. There are 9 languages for selection.

Factory Reset
This function resets the unit to the original factory settings.

Software Version
It will show the unit software version.

TROUBLE SHOOTING

No power
• Ensure that the unit is switched on and the battery is fully charged.
No sound output
• Make sure that the unit is not muted.
I can’t find the Bluetooth name of this unit on my Bluetooth device for Bluetooth pairing
• Ensure that the unit is switched on.
• Ensure that the Bluetooth function is activated on your Bluetooth device.
• The unit has a Bluetooth function that can receive a signal within 10 meters.
DAB +/FM reception
• Ensure the telescopic antenna at the rear panel should be extended fully to improve the DAB +/FM reception.

• Electrical interference in your home can cause poor reception. Move the unit to another location and check the reception again.

Interferences in Speakers

• Check that you have not left a mobile phone near the unit.

TECHNICAL SPECIFICATIONS

DAB + radio frequency range	174.928 - 239.200 MHz
FM radio frequency range	87.5 - 108 MHz
Bluetooth frequency range	2.402 - 2.480 GHz
Transmitter output power	Max 10 dBm
Charge in	DC 5 V 1 A
Built-in battery	1200 mAh
Speaker output power	1.4W RMS
Bluetooth version	V5.3
Headphone out	3.5 mm stereo jack
Dimension	120 (L) x 65 (D) x 24 (H) mm
Weight	124 g