ROXEL

Inspire Your Soul

Roxel RSB-100
Compact Soundbar
User Manual

Dear user

Thanks for purchasing Roxel RBS-100 TWS function Compact Soundbar.

ROXEL:

@2019 ROXEL, All rights reserved by ROXEL Limited registered in United Kingdom. The logo "ROXEL" is a trademark of ROXEL Limited.

Address
Roxel Limited
Unit 11a Lakes Industrial Park
Lower Chapel Hill
Braintree
Essex
CM7 3RU

01376 340 300
support@roxel.co.uk
www.roxel.co.uk

facebook.com/RoxelUK
twitter.com/roxeluk
instagram.com/roxel_uk

Introduction

Thanks for purchasing Roxel RBS-100 TWS function Compact Soundbar.

Bluetooth wireless communications Technology introduction

Bluetooth is a kind of wireless technology which support short distance communications (work normally within a distance of 10M) with it you can exchange information by wireless between many IT digital devices like mobile phones / wireless earphones / computers ect. Bluetooth technology effectively and simplify to the communications which makes device and data transmission quickly and off effectively.

Accessories List

1X Compact Soundbar
1X USB Charging Cable
1 X Audio Cable
1X User Manual

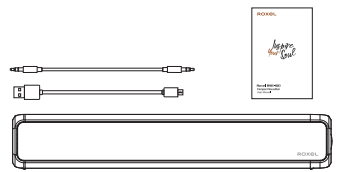

Key operation instructions

1. Power key
2. Play/pause
3. Next Track
4. Previous Track
5. Mode Conversion Button
6. Charging Port
7. USB Flash Drive
8. AUX Port
9. LED Indicator
10. Micro SD (TF) Card Slot
11. Volume knob

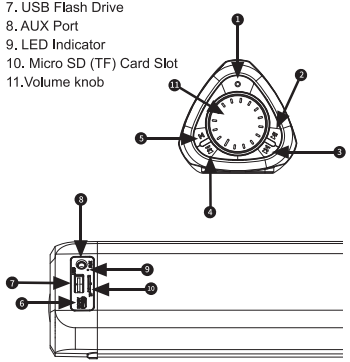

How To Use

Power on/off

Power on : long press ⏻ 3 seconds, blue light will on , with voice prompts.
Power off : long press ⏻ 3 seconds, blue light goes off , with voice prompts.

Volume

Volume adjustment: turn the knob clockwise to increase the volume, counter clockwise to reduce the volume.

Connect the Bluetooth

1. Switch the stereo into Bluetooth mode (press M for mode switch).
2. Turn on the Bluetooth device (mobile phone/tablet, etc.), search the pairing name "Roxel RSB-100", and connected it.
3. Key combination ⏮ + ⏭ : long press at the same time to disconnect or connect Bluetooth.

Bluetooth calling

1. When there is a call coming in Bluetooth mode, short press button ⏯ can connect the call .
2. During the call, the volume can be adjusted using the "volume" button.
3. short press the button ⏯ again to end the call.
4. Double-click the key ⏭ to dial back the last call.
5. Long press the button ⏮ to reject a call.

Music playback

1. Click the button ⏯ to play or pause music.
2. Short press the button ⏮ to switch to the previous song, short press the button ⏭ to switch to the next song.

How To Use

Charging

Pls charge the battery before first time using the device: Use 5V USB interface power adapter to charge the product.

1. Pls use charger in 5V 1A via USB cable to charge the device . The battery life will be different each time due to the volume's degree and environment's difference.
2. During using the device, pls charge the device in time when it has low battery voice prompting, the speaker will be off automatically if it was not be charged in time.
3. Pls charge the device one time per month to protect and extend the battery life if do not use it for a long time.

***Pls use adapter in 5V to charge it, or the device will be broken if it was charged in adapter less than 5V or higher than 5V.**

External TF card audio playback

TF card: Turn on the device, insert TF card which is with download music, it will play music directly.(Supports FAT32 file format, 32G Max.)

External U disk to play multimedia function

When the device in normal using, insert the U disk directly, it will transfer to U disk playback function automatically(If it do not play, pls check the U disk has MP3 media file or the file format of U disk is FAT32 or not as it does not support any other file format except FAT32.)

How To Use

AUX In

Mode conversion does not show the Aux in function. When using Aux in function, just insert Audio cable, then the device will transfer to AUX mode automatically.

TWS Connecting Function

Using 2 pcs same version Roxel RSB-100, power on them into Bluetooth mode together and long press the button at the same time, then they will be connected automatically. Finally 2 soundbars will be combined to one Bluetooth name: Roxel RBS-100 and search it to connect with your phone.

Product specification

Bluetooth Version: V5.0
Play Mode: Bluetooth / AUX / TF Card /U Disk
Soundbar Full Range Unit: 52mm 4Ω
Soundbar Power: RMS 5W
Power Output: 5W x 2
Charging Voltage: 5V/1A
S/N: ≥90dB
Distortion: <1%
Frequency Response: 60Hz-16KHz
Battery Capacity: 1800mAh / 3.7V
Passive Bass: 50mm
Working Time: 3.5 hours
Charging Time: about 3 hours
Bluetooth Transmission Distance: >10M

Safety And Maintenance

Please read suggestions below in order to help prolong the product lifespan and clearly understand the warranty clauses.

• Keep the product dry, do not put it in wet or humid circumstances to avoid short circuit.
• Avoid sun exposure for long time or high heat. High temperatures will shorten the lifespan of electronic components, damage battery and deform some plastic parts.
• Do not use the headphone in very low temperatures to avoid damage to PCB board.
• Do not attempt to take apart the product
• Do not drop, force, misuse or immerse in water to avoid damage to inner electronic circuit.
• Do not use chemical products, to clean the item.
• Do not scratch the surface with sharp items to avoid damaging the case and appearance.
• Do not charge longer than 10 hours for prolonged lifespan.

If your product is not in working order, Please contact with Roxel support team. (support@roxel.co.uk)

Products after-sales service

1. 30 Days Refund Policy

A. Guarantee of Refund: Manufacturer will issue a refund or offer a replacement within 30 days from the date of purchase, if the product bought is purchased from ROXEL stores or authorised distributors (user-fault and external damage excluded).

B. Refund Procedure: Please take the whole set of package and original invoice to the store the product was purchased. The seller will check by Quality Assurance Identification Rules to clarify the problem. If the product is faulty , the seller should issue a refund or offer replacement.

Guarantee and After Sales Services

Your Roxel RSB-100 is guaranteed for a period of 12 months from the date of purchase.

Subject to terms listed below , the guarantee will provide the repair of, at Rexel's or its agent's discretion to replace the device, or any component thereof, (other than batteries), which is identified as faulty or below standard, or as a result of inferior workmanship or materials. Products over 30 days old from the date of purchase may be replaced with a refurbished or repaired product.

• The conditions of guarantee are :

• The guarantee shall only apply to defects that occur within 12 months guarantee period

• Proof of purchase is required

• The equipment is returned to ROXEL Ltd. or its agent as instructed

This guarantee does not cover any faults or defects caused by accidents, misuse, fair wear and tear , neglect , tampering with the equipment, or any attempt adjustment or repair other than through approved agents.

This guarantee does not affect your statutory rights.